宝鸡机床集团有限公司
BAOJI MACHINE TOOL GROUP CO.,LTD
宝鸡忠诚机床股份有限公司
BAOJI ZHONGCHENG MACHINE TOOL CO.,LTD

BOSHI 宝鸡机床

VMC系列

立式加工中心

Machining Center

匠 心 智 造 中 国 好 机 床



地址:中国陕西省宝鸡市高新十四路
Add: Gaoxin 14 Road,Baoji,Shaanxi,China
邮编Postcode:721013
企业邮箱Email:gsbgs@bjmtw.com
官方网址Http://www.bjmtw.com

国内贸易Domestic Trade
电话Tel:0917-3566908 3566909
传真Fax:0917-3566966
邮箱Email:xsgs@bjmtw.com

国际贸易International Trade
电话Tel:+86-917-3566893 3566897
传真Fax:0917-3566900
邮箱Email:sales@bjmtw.com

全国客户服务热线Hot Line:400-119-9196

本样册内所印各种说明及图片如有变动，恕不另行通知（202503版）
Design and specifications given herein are subject to change without prior（Version 202503）

www.bjmtw.com



01 产品概况 Product Overview

VMC系列立式加工中心机床立柱采用宽底人字型高强度设计，整机刚性高、抗振性好、性能稳定可靠。广泛适用于汽车、摩托车、机械制造、缝纫机、仪器仪表、模具、电子等行业的壳体、阀类、盘类和箱壳类零件的高精高效率铣钻等加工。既可用于中小批量多品种加工生产，也可以纳入自动线进行批量生产。后缀B为三轴淬火硬轨，后缀H为三轴直线滚柱导轨，后缀L为两线一硬导轨。

VMC series vertical machining centre machine column adopts wide-bottomed herringbone high-strength design, the machine has high rigidity, good vibration resistance, stable and reliable performance. It is widely used in automobile, motorcycle, machine building, sewing machine, instrument, mould, electronics and other industries, such as shells, valves, discs and box shell parts of high accuracy and high efficiency milling and drilling processing. It can be used for both small and medium production with many varieties, and can also be used in automatic line for mass production. Model with B means three-axis hardened guideway, model with H means three-axis linear roller guideway, model with L means two lines and

02 性能优势 Performance advantages

- 整机为C型结构，采用人字型立柱，箱型滑台及底座，整机刚性高，稳定可靠；
- 三向丝杠预拉伸，减少热变形，刚性高、热稳定性好；
- 整体式主轴、采用精密角接触轴承，经过轴承预紧和整体动平衡处理，保证了主轴精度及刚性；
- 可选配螺旋或链式排屑器，效率高；
- 标配主轴环喷，保证高速切削时，所产生的热量被切削液带走，提升加工质量；
- 整机可选全封闭防护结构，整机防护性能优。

- The machine is C-type structure, adopting herringbone column, box-type slide table and base, the machine has high rigidity, stable and reliable;
- Three-direction screw pre-tension to reduce thermal deformation, high rigidity, heat stability;
- Integral spindle, using precision angular contact bearings, with bearing pre-tension and overall dynamic balancing treatment, to ensure spindle precision and rigidity;
- It is available with a screw chip conveyor or chain chip conveyor in optional configuration to ensure high efficiency;
- Spindle ring spray is equipped with standard configuration to ensure that the heat generated during high-speed cutting is carried away by the cutting fluid, which improves the machining quality;
- The machine can choose a fully enclosed protection structure, the machine has a good protection performance.

03 机床数据 Machine data

VMC系列立式加工中心：主要规格参数

项目 Item			单位 Unit	VMC1270	VMC1370	VMC1580	VMC1690	VMC1890
工作台 Workpiece	外形尺寸(宽×长) Machine size (W*L)		mm	700×1360	710×1400	800×1700	900×1800	900×2000
	T型槽 T slot		mm	5-18(H8)	5-18(H8)	5-22(H8)	5-22(H8)	5-22(H8)
	T型槽间距 T-shaped groove spacing		mm	152.5	152.5	135	165	165
	最大承重 Max. loading capacity		kg	1000	1000	1500	1600	1800
行程及范围 Travel and capacity	X左右行程 X-axis left and right travel		mm	1200	1300	1500	1600	1800
	Y前后行程 Y-axis forward and backward travel		mm	700	700	800	900	900
	Z上下行程 Z-axis up and down travel		mm	600	650	700	680	680
	主轴端面至工作台面距离 Distance from spindle nose to worktable surface		mm	150-750	150-800	170-870	160-840	160-840
	主轴中心至立柱导轨距离 Distance from spindle center to column guideway		mm	785	785	810	950	950
主轴 Spindle	主轴锥孔 Spindle taper			BT50				
	主轴功率 Spindle power		kW	15/18.5(FANUC)			18.5/22(FANUC)	
	主轴转速 Spindle speed		r/min	7000				
进给 Feed	最高进给速度(X/Y/Z) Max. Feed speed (X/Y/Z)		mm/min	10000				
	快速移动速度(X/Y/Z) Rapid speed(X/Y/Z)		m/min	20/20/20				
精度 Accuracy	定位精度 Position accuracy	X	mm	0.020	0.028	0.028	0.035	
		Y	mm	0.018	0.018	0.018	0.018	
		Z	mm	0.020	0.020	0.020	0.020	
	重复定位精度 Repeat position accuracy	X	mm	0.016	0.016	0.018	0.018	
		Y	mm	0.010	0.010	0.010	0.013	
		Z	mm	0.013	0.013	0.013	0.013	
其它 Other	电源 Power		kVA	26	26	35	45	45
	气压 Air pressure		Mpa	0.6-0.8				
	气源流量 Air Ventilation		L/min	350				
	机床尺寸(长×宽×高) Machine size (L*W*H)		mm	3600×3200×3100	3600×3200×3100	4300×3750×3100	4500×3800×3300	4800×3800×3300
				(标配，不含排屑器) (Standard configuration, without chip conveyor)				
	机床重量(净重) Machine weight (net weight)		kg	9000	10500	12500	14000	14500

注：此页参数为标准配置时参数，配置变更时部分参数可能会随之改变
Note:The parameters on this page are standard configuration parameters may change when the configuration is changed.

项目 Item			单位 Unit	VMC系列 1270L	1370L	1580L	855H	1167H
工作台 Workpiece	外形尺寸(宽×长) Machine size (W*L)		mm	700×1360	700×1360	800×1700	550×1000	650×1200
	T型槽 T slot		mm	5-18(H8)		5-22(H8)	5-18(H8)	
	T型槽间距 T-shaped groove spacing		mm	122	122	135	90	110
	最大承重 Max. loading capacity		kg	1000	1000	1500	500	800
行程及范围 Travel and capacity	X左右行程 X-axis left and right travel		mm	1200	1300	1500	800	1100
	Y前后行程 Y-axis forward and backward travel		mm	700	700	800	600	650
	Z上下行程 Z-axis up and down travel		mm	600	600	700	600	700
	主轴端面至工作台面距离 Distance from spindle nose to worktable surface		mm	87-687	90-790	130-830	105-705	95-795
	主轴中心至立柱导轨距离 Distance from spindle center to column guideway		mm	785	785	810	610	715
主轴 Spindle	主轴锥孔 Spindle bore			BT50			BT40	BT40
	主轴功率 Spindle power		kW	15/18.5(FANUC)			11/15(FANUC)	
	主轴转速 Spindle speed		r/min	7000			10000	8000
进给 Feeding	最高进给速度(X/Y/Z) Max. Feed speed (X/Y/Z)		mm/min	10000				
	快速移动速度(X/Y/Z) Rapid speed(X/Y/Z)		m/min	24/24/20			48/48/48	36/36/36
精度 Accuracy	定位精度 Position accuracy	X	mm	0.020	0.028	0.028	0.010	0.010
		Y	mm	0.018	0.018	0.018	0.010	0.010
		Z	mm	0.020	0.020	0.020	0.010	0.010
	重复定位精度 Repeat position accuracy	X	mm	0.016	0.018	0.018	0.008	0.008
		Y	mm	0.010	0.010	0.010	0.008	0.008
		Z	mm	0.013	0.013	0.013	0.008	0.008
其它 Other	电源 Power		kVA	26		35	26	26
	气压 Air pressure		Mpa	0.6-0.8				
	气源流量 Air Ventilation		L/min	350				
	机床尺寸(长×宽×高) Machine size (L*W*H)		mm	3600×3200×3100	3600×3000×3100	4300×3750×3100	2800×2400×2750	3300×2800×3100
				(标配，不含排屑器) (Standard configuration,without chip conveyor)				
	机床重量(净重) Machine weight (net		kg	9000	10500	12500	5000	5500

注：此页参数为标准配置时参数，配置变更时部分参数可能会随之改变

Note:The parameters on this page are standard configuration parameters may change when the configuration is changed.

项目 Item	规格 Specifications	VMC1270	VMC1370	VMC1580	VMC1690	VMC1890	VMC1270L	VMC1370L	VMC1580L	VMC855H	VMC1167H
控制系统 Control system	标配 Standard configuration	FANUC									
	选配 Optional configuration	广数25i □ GSK 25i □ 西门子828D □ SIEMENS 828D □ 华中818D □ HNC 818D □ 宝机B80M □ BochiB80M □									
防护型式 Guard type	手动后排全防护 Manual rear full guard	○	○	○	○	○	○	○	○	○	○
	手动前排防护 Manual front guard	●	●	●	●	●	●	●	●	●	●
	前侧链排防护 Front side chain guards	○	○	○	○	○	○	○	○	○	○
	双后链排防护 Double rear chain guards	○	○	○	○	○	○	○	○	○	○
主轴 Mail spindle	皮带式8000 r/min主轴 Belt type 8000r/min spindle	-	-	-	-	-	-	-	-	○	●
	皮带式7000 r/min主轴 Belt type 7000r/min spindle	●	●	●	●	●	●	●	●	-	-
	皮带式10000 r/min主轴 Belt type 10000r/min spindle	○	○	○	○	○	○	○	○	●	○
	直联12000r/min高速直联主轴 Lnline 12000r/min high speed spindle	○	○	○	○	○	○	○	○	○	○
圆盘刀库 Disc tool magazine	BT40X24	○	○	○	○	○	○	○	○	●	●
	BT50X24	●	●	●	●	●	●	●	●	-	○
主轴油冷单元 Spindle oil cooling unit		○	○	○	○	○	○	○	○	○	○
四轴 4-axis	盘面直径210 Disk diameter 210	○	○	○	○	○	○	○	○	○	○
	盘面直径255 Disk diameter 255	○	○	○	○	○	○	○	○	○	○
	盘面直径320 Disk diameter 320	○	○	○	○	○	○	○	○	-	○
	盘面直径400 Disk diameter 400	-	-	○	○	○	-	-	○	-	-
排屑器 Chip conveyor		○	○	○	○	○	○	○	○	○	○

04 机床图释 Machine tool illustration

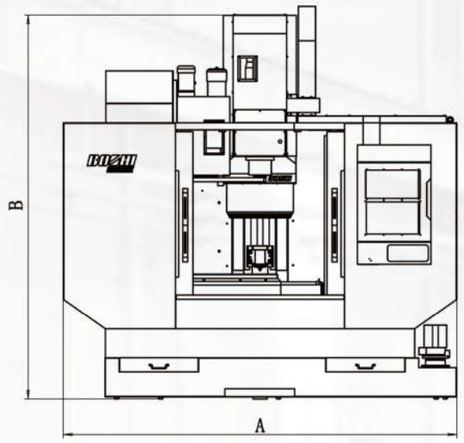

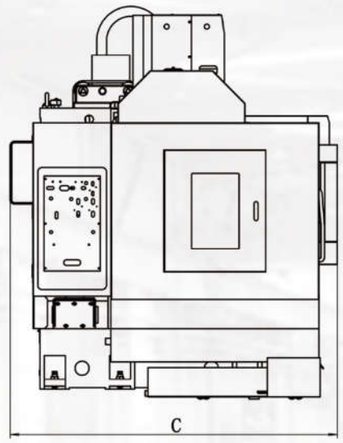

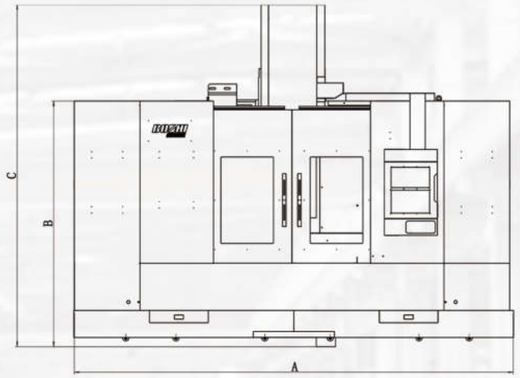

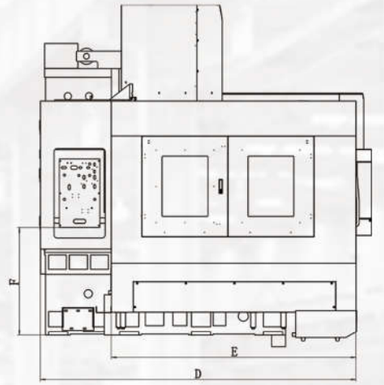

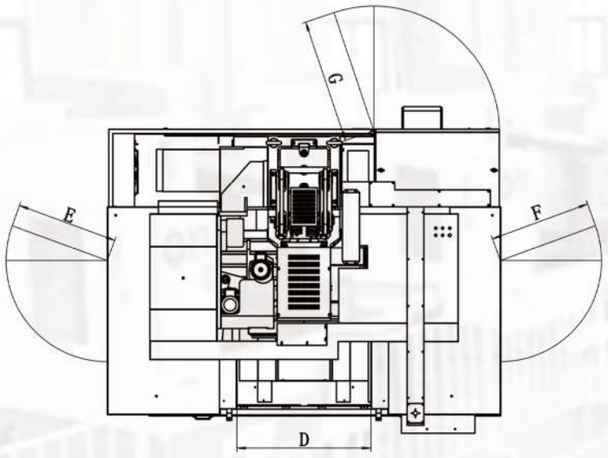

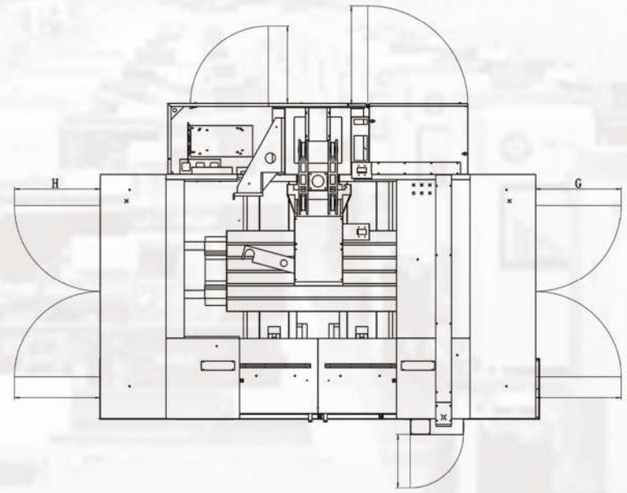

机床规格	VMC855H	VMC1167H	VMC1270	VMC1270L	VMC1370	VMC1370L
A	2800	3300	3720	3720	3720	3720
B	2800	3100	2295	2295	2295	2295
C	2400	2800	2927	2927	2927	2927
D	900	1070	1580	1580	1580	1580
E	720	820	895	895	895	895
F	720	820	895	895	895	895
G	880	1030	1080	1080	1080	1080

机床规格	VMC1580	VMC1580L	VMC1690	VMC1890
A	4334	4334	4500	4849
B	2428	2428	2543	2355
C	3380	3380	3404	3229
D	3117	3117	4260	3610
E	2415	2415	2485	2410
F	1064	1064	1257	1067
G	847	847	839	839
H	847	847	839	839